0532 SERIES

1.27x1.27mm(0.05"x0.05"), Box Header, 5.7mm Height

Specifications
Current Rating: 1Ampere
Insulation Resistance: 500MΩ Min.
Dielectric Withstanding: 300V AC
Contact Resistance: 20mΩ Max.
Operating Temperature: −40°C to +105°C

Materials
Contact Material: Phosphor Bronze
Contact Plating: Gold/Tin over Nickel
Insulator: Glass Filled Polyester (UL- 94V−0)

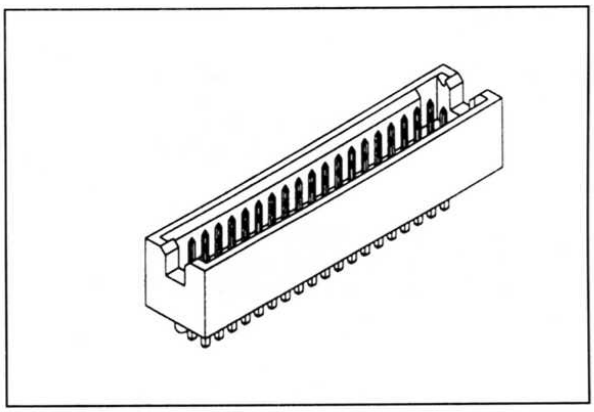

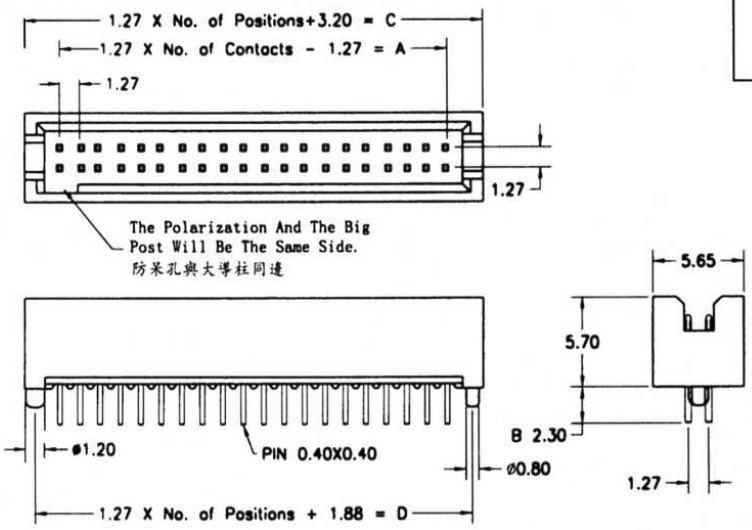

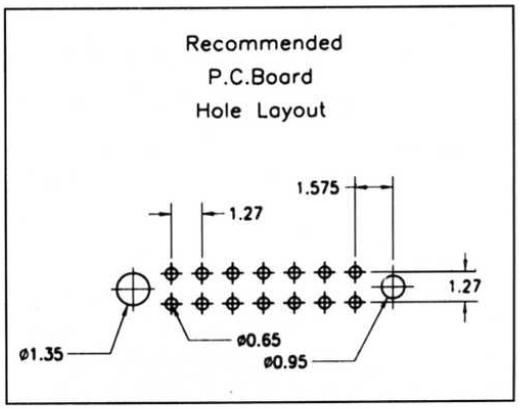

No. of PIN/ROW	Dimension Information A	C	D
05	5.08	9.55	8.23
06	6.35	10.82	9.50
07	7.62	12.09	10.77
08	8.89	13.36	12.04
09	10.16	14.63	13.31
10	11.43	15.90	14.58
11	12.70	17.17	15.85
12	13.97	18.44	17.12
13	15.24	19.71	18.39
14	16.51	20.98	19.66
15	17.78	22.25	20.93
16	19.05	23.52	22.20
17	20.32	24.79	23.47
18	21.59	26.06	24.74

No. of PIN/ROW	Dimension Information A	C	D
19	22.86	27.33	26.01
20	24.13	28.60	27.28
21	25.40	29.87	28.55
22	26.67	31.14	29.82
23	27.94	32.41	31.09
24	29.21	33.68	32.36
25	30.48	34.95	33.63
26	31.75	36.22	34.90
27	33.02	37.49	36.17
28	34.29	38.76	37.44
29	35.56	40.03	38.71
30	36.83	41.30	39.98
31	38.10	42.57	41.25
32	39.37	43.84	42.52

No. of PIN/ROW	Dimension Information A	C	D
33	40.64	45.11	43.79
34	41.91	46.38	45.06
35	43.18	47.65	46.33
36	44.45	48.92	47.60
37	45.72	50.19	48.87
38	46.99	51.46	50.14
39	48.26	52.73	51.41
40	49.53	54.00	52.68
41	50.80	55.27	53.95
42	52.07	56.54	55.22
43	53.34	57.81	56.49
44	54.61	59.08	57.76
45	55.88	60.35	59.03
46	57.15	61.62	60.30

No. of PIN/ROW	Dimension Information A	C	D
47	58.42	62.89	61.57
48	59.69	64.16	62.84
49	60.96	65.43	64.11
50	62.23	66.70	65.38
51	63.50	67.97	66.65
52	64.77	69.24	67.92
53	66.04	70.51	69.19
54	67.31	71.78	70.46
55	68.58	73.05	71.73
56	69.85	74.32	73.00
57	71.12	75.59	74.27
58	72.39	76.86	75.54
59	73.66	78.13	76.81
60	74.93	79.40	78.08

Ordering Information

0532 - X 0 0 - X X X

1:Tin
2: Gold
3: Half Gold

Position

3:大小柱
4:無導柱
5:鐵耳